UGP100100

UNITEQ BV
Oude Graaf 18, 6002 NL, Netherlands
T. +31 495 52 45 65
E. sales@uniteq.nl

Version 2022.v01 EN

Pneumatic manifold G1-O/C 1xNC-LU 1xNC

Image

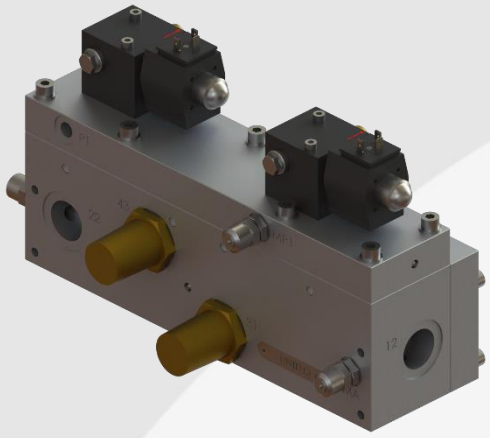

Technical features

- Suitable for double acting (DA) actuator
- Fail safe lock-up function (1x NC, power/signal loss)
- Open or close O/C (1x NC) function
- Stay put function LU (1x NC) function
- SIL2 certified according to IEC 61508
- Operation pressure 0…10 bar (0…145psi)
- Operation temperature -25°C -13°F / +70°C +158°F
- Supplied medium air, filtered non-lubricated and dry
- Equipped with prepared lock-up valve connection (P/P1)
- ATEX implementation suitable

Symbol

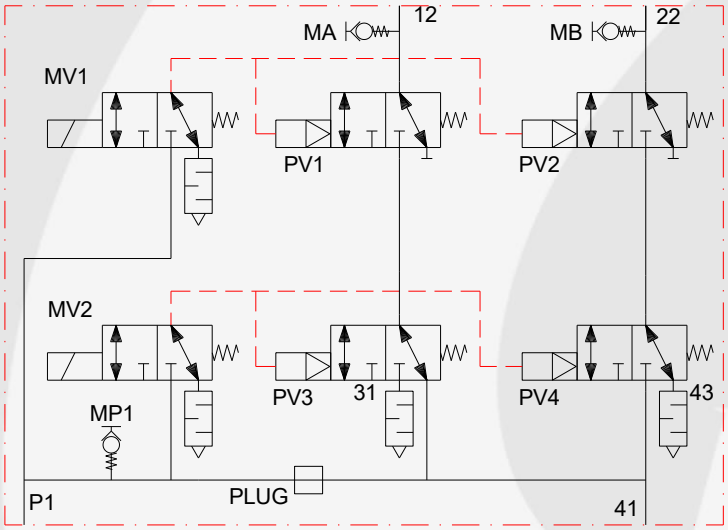

Technical data

Sizes & selection

Port size 12/22	Port size 31/41/43	P1	Max flow ltr/min	CV	(kg)	Model
G1	G1	G1/4	8.000	...	8.9	UGP100100

Configuration

Function	O/C (1x NC "MV2") LU (1x NC "MV1")

Connections

Port (12/22)	supply actuating
Port (31/43)	release
Port (P1)	external supply solenoid valve
Port (41)	supply to open or close
MA/MB/MP1	measurement connection

Electric

Power consumption solenoid valve (MV1/MV2):

16.9 W,	24 VDC,	703 mA,	IP65.
17.3 VA	230 VAC,	75 mA	IP67.

Order codes:

UGP100100-24VDC or UGP100100-230VAC

Drawing

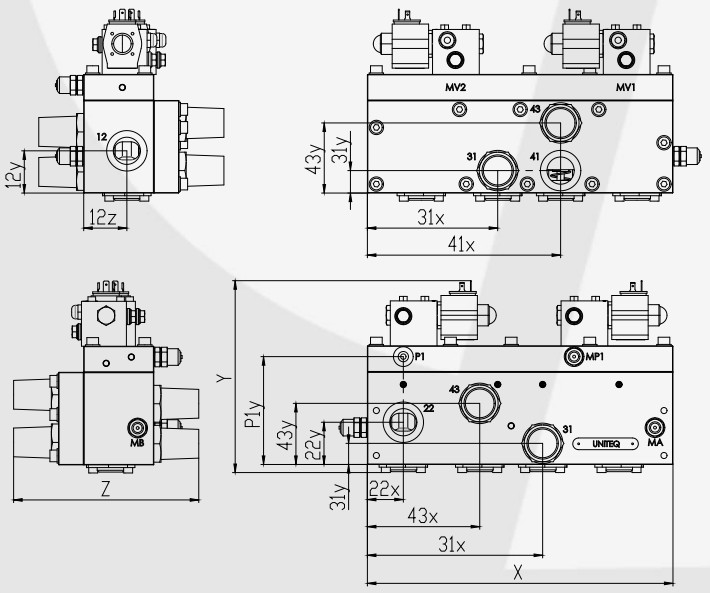

Sizes

Dimensions

12	22	31	43	41	MA	MB	P1	MP1
G1	G1	G1	G1	G1	G1/4	G1/4	G1/4	G1/4
PLUG	12y	12z	31y	31x	43y	22y	22x	41x
G1/8	47	48	25	195	78	47	40	215
43x	P1y	X	Y	Z				
125	120	340	214	206				

Support connection manifold

4 times holes M8, depth 12mm

Material

Housing	Aluminium anodize
Internal parts	Stainless steel, Brass, POM
Seals	NBR / PUR